IKO products are avaiable from: **MARYLAND METRICS**
phones: (410)358-3130 (800)638-1830 faxes: (410)358-3142 (800)872-9329
P.O.Box 261 Owings Mills, MD 21117 USA URL: http://mdmetric.com E-mail: sales@mdmetric.com

MINICAM Series

CF•CFS

CAT-57115B

ISO 9002 Certified

ISO 14001 Certified

copyright 2002 maryland metrics/iko international

Evolution in MINICAM world

Wide range of variations including the world-smallest cam follower !

MINICAM
SERIES

The smallest size is newly introduced !

Stud diameter 2 mm !
Outer ring outside diameter 4.5 mm !

Smallest size cam follower

IKO MINICAM Series

CF·CFS

IKO MINICAM Series
CF·CFS

IKO MINICAM series are compactly designed cam followers with the stud diameter 2 to 6 mm and the outer ring outside diameter 4.5 to 13mm. They are suitable for use as follower bearings in lightly loaded high precision cam mechanisms and linear motion mechanisms, and used widely in applications such as electric parts manufacturing and inspection equipment, precision measuring instruments, and OA equipment.
Stainless steel made cam followers are highly resistant to corrosion, and best suited for use at places where oil can not be used, in environments exposed to water splashes or in clean rooms.

Standard Type Cam Followers (Mini size) CF

These are small sizes of standard type IKO Cam Followers. Wide variations in size and shape are available.

Miniature Type Cam Followers CFS

These are compactly designed bearings, incorporating very thin needle rollers in an outer ring with a smaller outside diameter compared to the standard type with the same stud size. They are used in electronic devices, OA equipment, small-size index devices, etc.

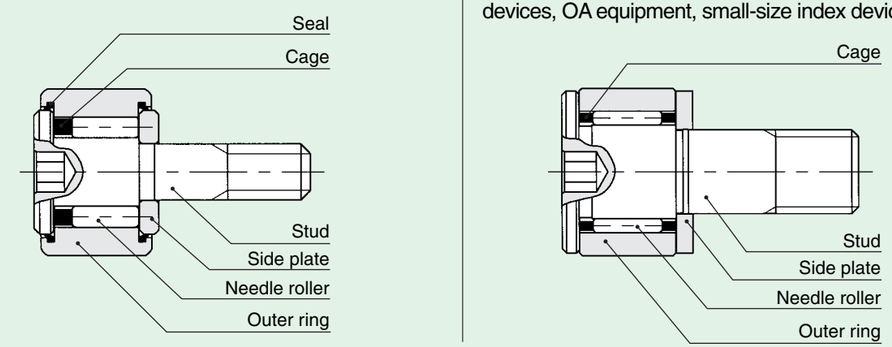

Structure of MINICAM series

IKO MINICAM series are suitable for a wide range of applications.

IKO MINICAM series

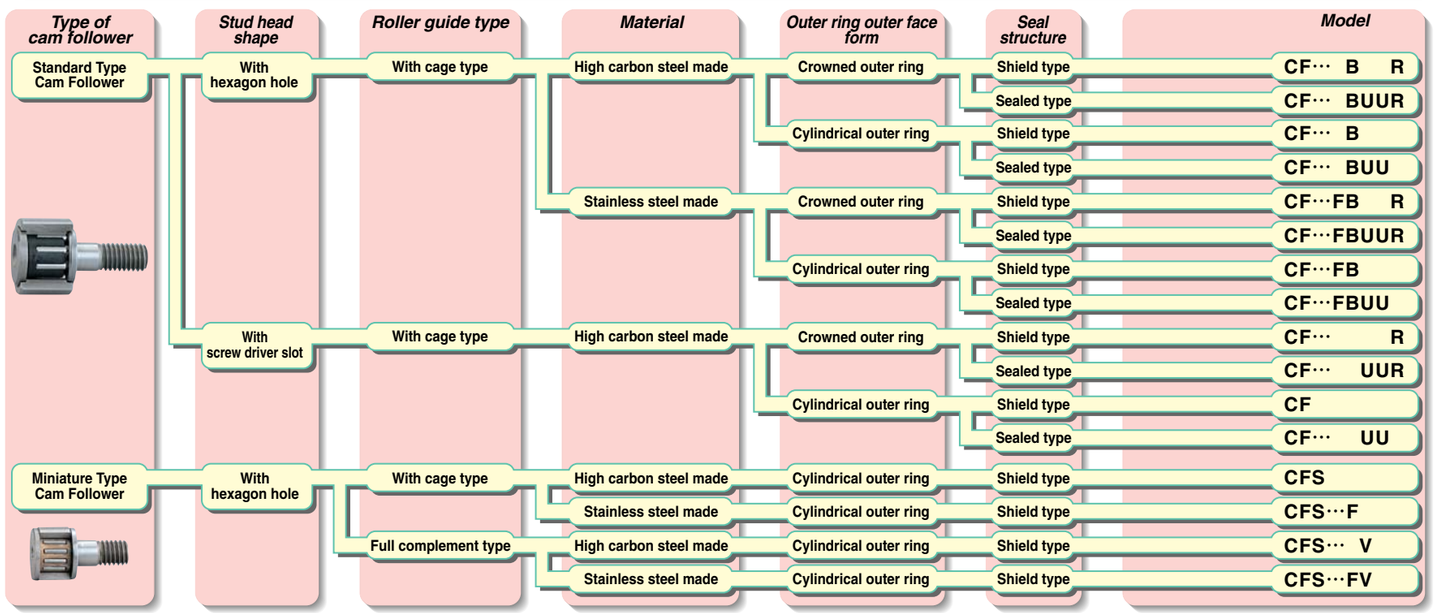

Size variation of IKO MINICAM series

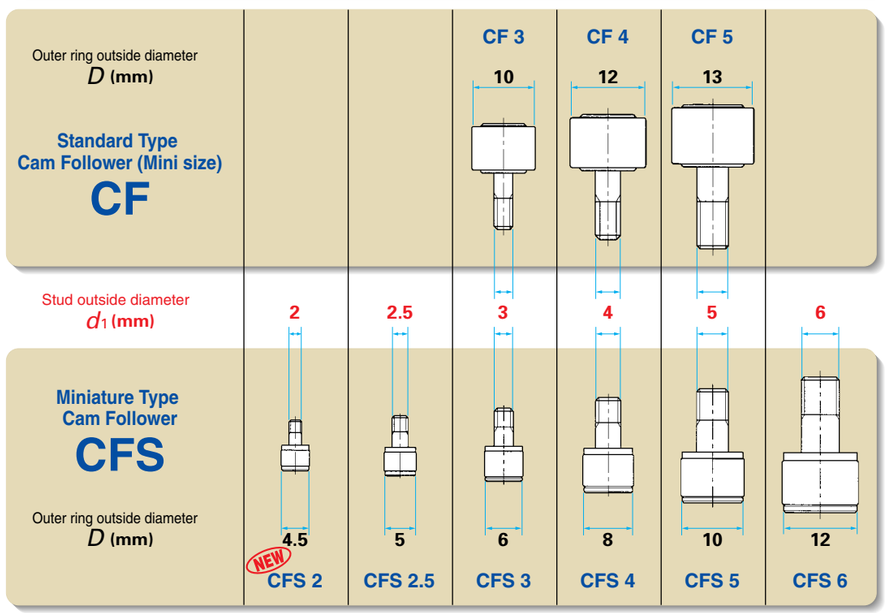

Identification Number

Examples of identification number of IKO MINICAM series are shown below.

Examples of identification number

Standard Type Cam Follower → CF 5 B UU R

Miniature Type Cam Follower → CFS 3 F V P6

Model code	
CF	Standard Type Cam Follower
CFS	Miniature Type Cam Follower

Size
Stud diameter is indicated.(unit: mm)

Material	
No symbol	High carbon steel made
F	Stainless steel made

Roller guide type	
No symbol	With cage type
V	Full complement type

Stud head shape	
No symbol	With screw driver slot
B	With hexagon socket hole

Seal structure	
No symbol	Shield type
UU	Sealed type

Outer ring outer face form	
No symbol	Cylindrical outer ring
R	Crowned outer ring

Accuracy	
No symbol	Class 0
P6	Class 6
P5	Class 5
P4	Class 4

Accuracy

Accuracy of IKO MINICAM series are shown in Tables 1, 2.1 and 2.2.

Table 1 Tolerance unit: μm

Item / Series	Standard Type Cam Follower		Miniature Type Cam Follower
	Crowned outer ring	Cylindrical outer ring	
Outside dia. of outer ring D	0 −50	See Table 2.1.	See Table 2.2.
Stud dia. d_1	h7		h6
Width of outer ring C	0 −120		0 −120

Table 2.1 Accuracy of outer ring (Standard Type Cam Follower) unit: μm

Δ_{Dmp} Single plane mean outside dia. deviation		V_{Dp} Outside dia. variation in a single radial plane (Max.)	V_{Dmp} Mean outside dia. variation (Max.)	K_{ea} Radial runout of assembled bearing outer ring (Max.)
High	Low			
0	−8	10	6	15

Table 2.2 Accuracy of outer ring (Miniature Type Cam Follower) unit: μm

Δ_{Dmp} Single plane mean outside dia. deviation								K_{ea} Radial runout of assembled bearing outer ring (Max.)			
Class 0		Class 6		Class 5		Class 4		Class 0	Class 6	Class 5	Class 4
High	Low	High	Low	High	Low	High	Low				
0	−8	0	−7	0	−5	0	−4	15	8	5	4

Radial internal clearance

Radial internal clearance of IKO MINICAM series is shown in Table 3.

Table 3 Radial internal clearance unit: μm

Indetification number (1)		Radial internal clearance	
Standard Type Cam Follower	Miniature Type Cam Follower	Min.	Max.
CF 3 ～ CF 5	CFS 2 ～ CFS 5	3	17
—	CFS 6	5	20

Note (1): Only representative types are shown, but applicable to all types.

Fit

Mounting hole tolerance for stud is recommended to be H7 for Standard Type Cam Followers, and H6 for Miniature Type Cam Followers. Since Cam Followers are supported in a cantilever position, the mounting hole diameter should be prepared without play between the stud and the mounting hole especially when heavy shock loads are applied.

Table 4 Tolerance of mounting hole unit: μm

Nominal outside dia. of stud mm		H6		H7	
over	incl.	High	Low	High	Low
—	3	+6	0	+10	0
3	6	+8	0	+12	0

Maximum Allowable Load

The applicable load on Cam Follower is, in some cases, limited by the bending strength, shear strength of stud, and strength of outer ring instead of the load rating of needle roller bearing, because the Cam Follower is mounted in a cantilever position. Maximum allowable loads shown in dimension tables are the allowable loads limited by the bending strength and shear strength.

Track capacity

Track capacity is defined as the load which can be continuously applied on a Cam Follower placed on a steel track surface without causing deformation and indentation (dent) on the track surface. The track capacities shown in Table 5 are applicable when the hardness of the mating track surface is HRC40 (Tensile strength 1250N/mm^2). When the hardness of the mating track surface differs from HRC40, the track capacity is obtained by multiplying the value with a track capacity factor shown in Table 6.
If lubrication between the outer ring and the mating track surface is insufficient, seizure and/or wear may occur depending on the application. Therefore, it is needed to pay attention to lubrication and surface roughness of mating track especially in case of high speed rotation such as cam mechanisms.

Table 5 Track capacity

Type (1)	Identification Number Crowned outer ring	Track capacity N	Identification Number Cylindrical outer ring	Track capacity N
Standard Type Cam Follower	CF 3 R	542	CF 3	1 360
	CF 4 R	712	CF 4	1 790
	CF 5 R	794	CF 5	2 210
Miniature Type Cam Follower	—	—	CFS 2	220
	—	—	CFS 2.5	298
	—	—	CFS 3	485
	—	—	CFS 4	799
	—	—	CFS 5	1 210
	—	—	CFS 6	1 680

Note (1): Only representative types are shown, but applicable to all types.

Table 6 Track capacity factor

Hardness HRC	Tensile strength N／mm^2	Track capacity factor	
		Crowned outer ring	Cylindrical outer ring
20	760	0.22	0.37
25	840	0.31	0.46
30	950	0.45	0.58
35	1 080	0.65	0.75
38	1 180	0.85	0.89
40	1 250	1.00	1.00
42	1 340	1.23	1.15
44	1 435	1.52	1.32
46	1 530	1.85	1.51
48	1 635	2.27	1.73
50	1 760	2.80	1.99
52	1 880	3.46	2.29
54	2 015	4.21	2.61
56	2 150	5.13	2.97
58	2 290	6.26	3.39

Allowable rotational speed

Allowable rotational speeds of IKO MINICAM series are affected by mounting and operating conditions. The d_1n values in general operation under pure radial load are shown in Table 7 for reference. It is recommended to use 1/10 of the table values in actual applications taking account of axial loads that may be applied.

Table 7 d_1n(1) values of IKO MINICAM series

Type \ Lubricant	Grease
With cage type	84 000
Full complement type	42 000

Note(1): $d_1 \times n$
where, d_1: Stud diameter, mm
n: Number of rotations per minute, rpm

Lubricant and temperature

A quality lithium-soap base grease is prepacked in IKO MINICAM series. Allowable temperature ranges are shown in Table 8. Relubrication can not be made in these series, because of their structure.

Table 8 Allowable temperature range

Stud dia. d_1 mm \ Type		With cage type		Full complement type
		Shield type	Sealed type	
Standard Type Cam Follower	3, 4	−20°C～+110°C(1)	−20°C～+80°C	—
	5	−20°C～+120°C	−20°C～+80°C	—
Miniature Type Cam Follower	2	−20°C～+120°C(1)	—	−20°C～+120°C
	2.5～6	−20°C～+120°C	—	−20°C～+120°C

Note(1): For continuous operation, the maximum operating temperature is 100°C.

Oil hole

The position of oil hole on the "Standard Type Cam Followers with screwdriver slot", CF5R, CF5, CF5UUR, and CF5UU is shown in Fig. 1. Grease should be supplied gently with a straight type grease gun as specified by JIS B 9808:1991, which is to be applied carefully to the nipple head from the front. "Standard Type Cam Followers with screwdriver slot" of other sizes, "Standard Type Cam Followers with hexagon hole", and "Miniature Type Cam Followers" cannot be re-lubricated.

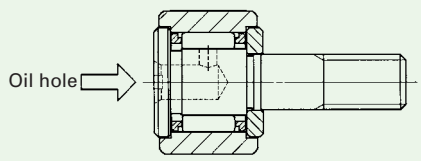

Fig.1 Position of oil hole

Accessories

A nut is appended to the Miniature Type Cam Followers. And a grease nipple (Refer to Fig.2.) and a plug (Refer to Fig.3.) are appended to the Standard Type Cam Followers with screwdriver slot, CF5R, CF5, CF5UUR, and CF5UU.

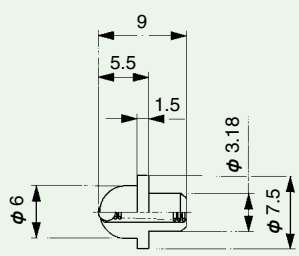

Fig.2 Grease nipple

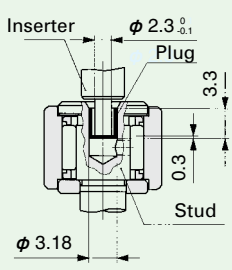

Fig.3 Plug and inserter

Mounting

❶ Make the center axis of mounting hole perpendicular to the moving direction of the Cam Follower and match the side shoulder accurately with the seating surface indicated by dimension "*f*" in the dimension tables (Refer to Fig.4.). Then fix the Cam Follower with the nut. DO NOT hit the flange head of Cam Follower directly with a hammer, etc. It may lead to bearing failures such as irregular rotation and crack.

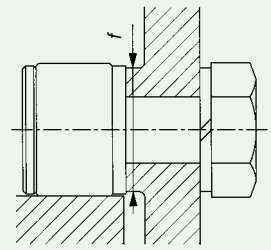

Fig.4 Mounting example

❷ The IKO mark on the stud flange head of the Cam Followers with oil hole indicates the position of oil hole on the raceway. Avoid locating the oil hole within the loading zone. It may lead to short bearing life. (Refer to Fig.5.)

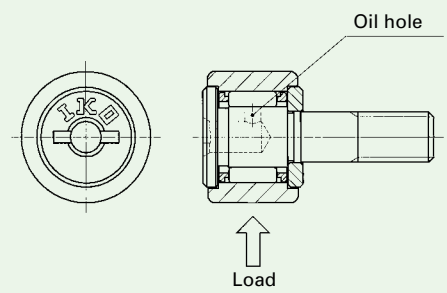

Fig.5 Oil hole position and loading direction

❸ When tightening the nut, the tightening torque should not exceed the values shown in the dimension tables. If the tightening torque is too large, it is possible that the threaded portion of stud will be broken. When there are possibilities of loosening, a special nut such as a lock nut, a spring washer or a self-locking nut should be used.

IKO Standard Type Cam Followers with Hexagon Hole

CF··· B With cage type
CF··· FB With cage type. Stainless steel made

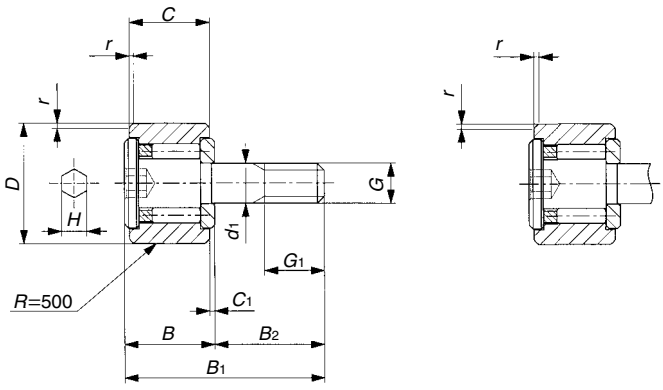

CF··· BR
CF···FBR

CF··· B
CF···FB

Stud dia. mm	Identification number: Shield type, With crowned outer ring	Shield type, With cylindrical outer ring	Sealed type, With crowned outer ring	Sealed type, With cylindrical outer ring	Mass (Ref.) g	Boundary dimensions mm: D	C	d_1	G	G_1
3	CF 3 BR	CF 3 B	CF 3 BUUR	CF 3 BUU	4.3	10	7	3	M3 × 0.5	5
	CF 3 FBR	CF 3 FB	CF 3 FBUUR	CF 3 FBUU						
4	CF 4 BR	CF 4 B	CF 4 BUUR	CF 4 BUU	7.4	12	8	4	M4 × 0.7	6
	CF 4 FBR	CF 4 FB	CF 4 FBUUR	CF 4 FBUU						
5	CF 5 BR	CF 5 B	CF 5 BUUR	CF 5 BUU	10.3	13	9	5	M5 × 0.8	7.5
	CF 5 FBR	CF 5 FB	CF 5 FBUUR	CF 5 FBUU						

Note(1): Minimum allowable value of chamfer "*r*"

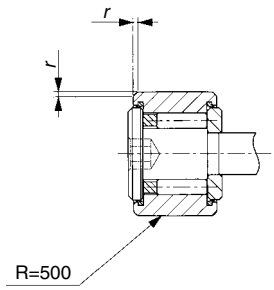

CF… BUUR
CF…FBUUR

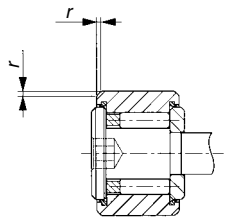

CF… BUU
CF…FBUU

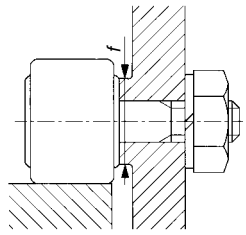

B	B_1	B_2	C_1	H	r_{smin}(1)	Mounting dimension f Min. mm	Maximum tightening torque N-m	Basic dynamic load rating C N	Basic static load rating C_0 N	Maximum allowable load N
8	17	9	0.5	2	0.2	6.8	0.29	1 500	1 020	384
								1 200	813	384
9	20	11	0.5	2.5	0.3	8.3	0.78	2 070	1 590	834
								1 650	1 270	834
10	23	13	0.5	3	0.3	9.3	2.3	2 520	2 140	1 260
								1 930	1 730	1 260

1N=0.102kgf=0.2248lbs.
1mm=0.03937inch

IKO Standard Type Cam Followers with Screw Driver Slot

CF With cage type

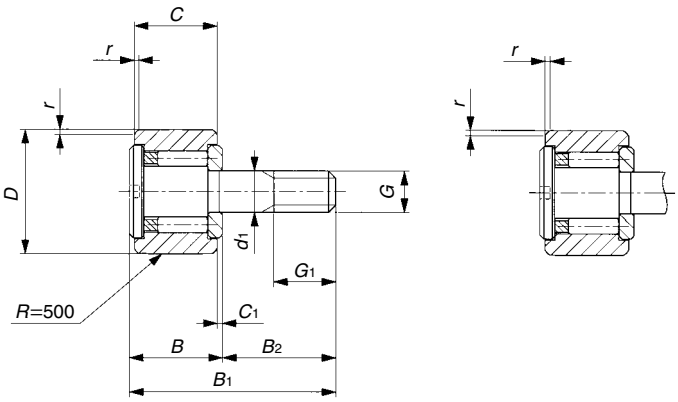

CF…R　　CF

Stud dia. mm	Identification number: Shield type, With crowned outer ring	Identification number: Shield type, With cylindrical outer ring	Identification number: Sealed type, With crowned outer ring	Identification number: Sealed type, With cylindrical outer ring	Mass (Ref.) g	Boundary dimensions mm: D	C	d_1	G	G_1
3	**CF 3 R**	**CF 3**	**CF 3 UUR**	**CF 3 UU**	4.3	10	7	3	M3 × 0.5	5
4	**CF 4 R**	**CF 4**	**CF 4 UUR**	**CF 4 UU**	7.4	12	8	4	M4 × 0.7	6
5	**CF 5 R**	**CF 5**	**CF 5 UUR**	**CF 5 UU**	10.3	13	9	5	M5 × 0.8	7.5

Note(1): Minimum allowable value of chamfer "*r*"

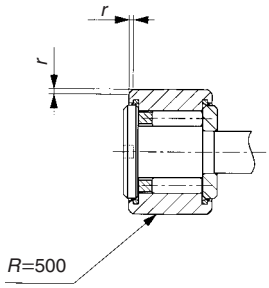

CF…UUR

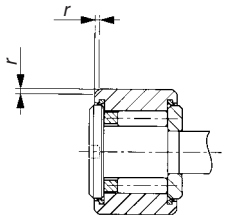

CF…UU

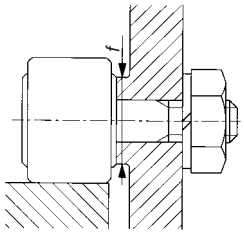

B	B_1	B_2	C_1	r_{smin}(1)	Mounting dimension f Min. mm	Maximum tightening torque N-m	Basic dynamic load rating C N	Basic static load rating C_0 N	Maximum allowable load N
8	17	9	0.5	0.2	6.8	0.29	1 500	1 020	384
9	20	11	0.5	0.3	8.3	0.78	2 070	1 590	834
10	23	13	0.5	0.3	9.3	2.3	2 520	2 140	1 260

1N=0.102kgf=0.2248lbs.
1mm=0.03937inch

IKO Miniature Type Cam Followers

CFS	With cage type
CFS…V	Full complement type
CFS…F	With cage type Stainless steel made
CFS…FV	Full complement type Stainless steel made

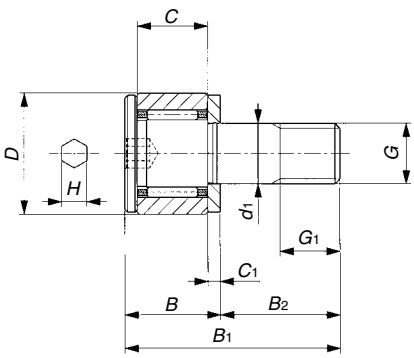

CFS
CFS…F

Stud dia. mm	Identification number: With cage type	Identification number: Full complement	Mass (Ref.) g	Boundary dimensions mm: D	C	d1	G	G1	B
2	CFS 2 —	— CFS 2 V	0.6	4.5	2.5	2	M2 ×0.4	2	4
	CFS 2 F —	— CFS 2 FV							
2.5	CFS 2.5 —	— CFS 2.5 V	1	5	3	2.5	M2.5 ×0.45	2.5	4.5
	CFS 2.5 F —	— CFS 2.5 FV							
3	CFS 3 —	— CFS 3 V	2	6	4	3	M3 ×0.5	3	5.5
	CFS 3 F —	— CFS 3 FV							
4	CFS 4 —	— CFS 4 V	4	8	5	4	M4 ×0.7	4	7
	CFS 4 F —	— CFS 4 FV							
5	CFS 5 —	— CFS 5 V	7	10	6	5	M5 ×0.8	5	8
	CFS 5 F —	— CFS 5 FV							
6	CFS 6 —	— CFS 6 V	13	12	7	6	M6 ×1	6	9.5
	CFS 6 F —	— CFS 6 FV							

Although all data in this catalog has been carefully compiled to make the information as complete as possible, NIPPON THOMPSON CO., LTD. shall not be liable for any damages whatsoever, direct or indirect, based upon any information in this catalog. NIPPON THOMPSON CO., LTD. makes no warranty, either express or impiled, including the impiled warranty of merchantability or fitness for a particular purpose.

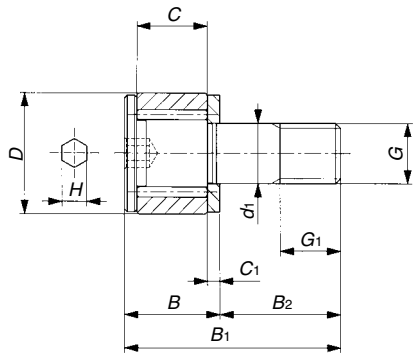

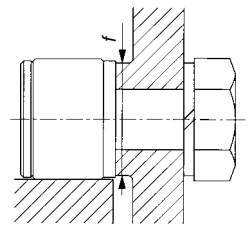

CFS…V
CFS…FV

B_1	B_2	C_1	H	Mounting dimension f Min. mm	Maximum tightening torque N-cm	Basic dynamic load rating C N	Basic static load rating C_0 N	Maximum allowable load N
8	4	0.7	0.9	4.3	9.1	288 768	202 734	202 229
						230 614	161 587	161 229
9.5	5	0.7	0.9	4.8	18.7	428 1 000	351 1 080	351 360
						342 800	281 862	281 360
11.5	6	0.7	1.3	5.8	33.5	629 1 420	611 1 790	484 484
						504 1 140	488 1 430	484 484
15	8	1.0	1.5	7.7	77.7	1 120 2 370	1 120 3 000	919 919
						897 1 900	894 2 400	894 919
18	10	1.0	2	9.6	158	1 570 3 180	1 850 4 700	1 570 1 570
						1 250 2 540	1 480 3 760	1 480 1 570
21.5	12	1.2	2.5	11.6	268	2 090 4 610	2 200 6 250	2 150 2 150
						1 670 3 690	1 760 5 000	1 760 2 150

IKO products are avaiable from: **MARYLAND METRICS**
phones: (410)358-3130 (800)638-1830 faxes: (410)358-3142 (800)872-9329
P.O.Box 261 Owings Mills, MD 21117 USA URL: http://mdmetric.com E-mail: sales@mdmetric.com

1N=0.102kgf=0.2248lbs.
1mm=0.03937inch